Software development for Laser Engineered Net Shaping

M. T. Ensz, M. L. Griffith, L. D. Harwell

Sandia National Laboratories
Albuquerque, NM 87185

Abstract

Laser Engineered Net Shaping, also known as LENS™, is an advanced manufacturing technique used to fabricate near-net shaped, fully dense metal components directly from computer solid models without the use of traditional machining processes. The LENS™ process uses a high powered laser to create a molten pool into which powdered metal is injected and solidified. Like many SFF techniques, LENS™ parts are made through a layer additive process. In the current system, for any given layer, the laser is held stationary, while the part and its associated substrate is moved, allowing for the each layer's geometry to be formed. Individual layers are generated by tracing out the desired border, followed by filling in the remaining volume. Recent research into LENS™ has highlighted the sensitivity of the processes to multiple software controllable parameters such as substrate travel velocity, border representation, and fill patterns. This research is aimed at determining optimal border outlines and fill patterns for LENS™ and at developing the associated software necessary for automating the creation of the desired motion control.

Introduction

During the past few years, the capabilities of solid freeform fabrication have progressed enough to allow for the direct fabrication of fully dense metallic components using computer aided design (CAD) models [1-4]. One such technique, being developed at Sandia National Laboratories to fabricate high strength, near net shape metallic components, is Laser Engineered Net Shaping (LENS™). In the past several years, a variety of components have been fabricated using LENS™ for applications ranging from part prototypes to tooling for injection molding [5-6].

The basic LENS™ system consists of a high power Nd:YAG laser, a 3-axis computer controlled positioning system, and multiple powder feed units. The positioning stages are mounted inside an argon-filled glove box (nominal oxygen level of 2-3 ppm), while the laser beam enters the glove box through a top mounted window. A powder delivery nozzle is used to inject a metal powder stream directly into the focused laser beam. The lens and powder delivery nozzle move as an integral unit in the *z*-axis, while the part, positioned under the laser beam, is transitioned in *x* and *y*.

To create a part, a CAD solid model is sliced into a sequence of cross-sections that are then translated into a series of tool path patterns to build each layer. The laser beam is focused onto a substrate (or previous layer of the part) to create a weld pool into which powder is simultaneously injected to buildup each layer. The substrate is translated beneath the laser beam to deposit the desired geometry for the current layer. After completing a layer, the powder delivery nozzle and focusing lens assembly is incremented in the *z*-direction, and the process begins again.

After determining the basic LENS™ parameters (i.e. laser power, powder feed rate, traverse velocities, layer thicknesses and hatch spacings) for a chosen material or materials, extrusion or solid geometries may be fabricated. With a full understanding of the LENS™ parameters and with proper computer

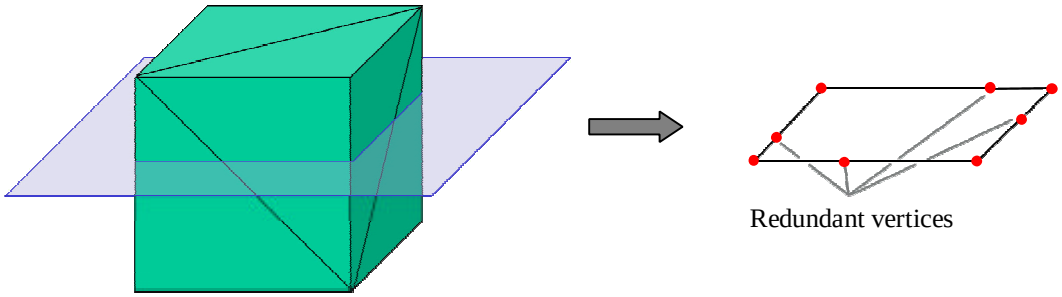

Figure 1. Intersection of a triangular mesh with a plane typically results in a 2D contour with redundant vertices.

control of the LENS™ process, fully dense parts may be repeatedly built with errors less than +0.005" in the *x* and *y*-axes, and less than 0.015" in the *z*-axis.

Recent research into LENS™ has highlighted the sensitivity of the processes to multiple software controllable parameters such as substrate travel velocity, border representation, and fill patterns. This research is aimed at determining optimal border outlines and fill patterns for LENS™ and at developing the associated software necessary for automating the creation of the desired motion control.

Overall Software Flow

For any layered manufacturing technology, the overall goal of the control software is to take a CAD representation of the part, slice the model into appropriate thickness layers, and create path instructions for the manufacturing equipment. For LENS™, the path planning process begins with an object defined using the STL format. This triangulated mesh is intersected with appropriately defined planes in order to create 2D contour information for each layer to be formed. These contours are then refined to remove any vertex redundancies and to improve part quality. After cleanup, if creating a solid part, the contours are used as a basis for creating the necessary fill pattern. The final result of the path planning process is a tool path program (G-code) that is used to drive the three axes of the LENS™ machine.

File format used by LENS

As previously stated, the LENS™ process starts with an object defined through the RP industry standard STL format. While the deficiencies of this format are well understood, the use of STL meshes for object definition does allow a large variety of CAD packages to be used to develop parts for use with LENS™. Further, the simple triangular format used by STL allows for relatively easy manipulation of the part files. While the STL format is typically not a precise representation of the original CAD model (curved surfaces are faceted), meshes can be readily cut which are well within the tolerances of the LENS™ process. The only true difficulty posed by the use of the STL format is that the triangular representation, when sliced, often results in vertex redundancies (straight edges defined by more than two vertices, arcs being "over defined", etc.). As will be discussed, these redundancies will often have adverse affects on the build process. To minimize these affects, the contours require significant refinement.

Contour refinement

Due to the nature of triangular meshes, when intersecting a mesh with a plane to create a 2D contour, the vertices formed from the intersection process will inevitably contain numerous "redundant" vertices – vertices that do not add information about the contour's geometry or topology. Even for a simple cube, as

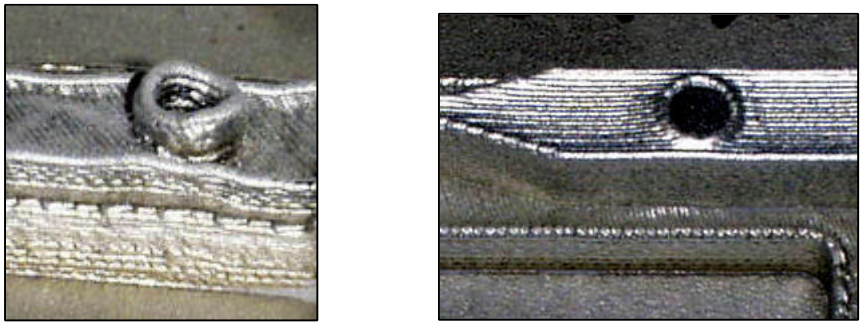

(a) (b)

Figure 2. (a) Using too many edges to define contours results in excessive buildup. (b) Reducing the number of edges used to define the contour produces a more desirable part.

shown in Figure 1, a straightforward intersection of any plane with the triangular mesh will create line segments which contain more than the minimum two vertices. While these redundancies may not pose problems for other layered manufacturing processes, they may significantly affect the quality of parts produced through the LENS™ process. Primarily, each line segment start/stop reduces the physical machine speed as the stages are forced to decelerate and accelerate through each vertex. Since the LENS™ build rate is related to laser energy per unit time, decreasing the stages' velocities results in a significant alteration of the metal deposition. Another obstacle, resulting from the use of a triangulated mesh to define the object, is a possible "over refinement" of arcs and circles. As with over-defined straight segments, the accelerations and decelerations through each vertex of an over defined arc results in a decrease in the travel speed and a corresponding increase in the metal deposition rate (Figure 2(a)).

The contour refinement process is relatively straightforward. First, any duplicate vertices are removed from the contour. (Duplicate vertices are considered as those that are coincident to each other within some epsilon.) Next, any redundant vertices are located and removed from line segments. To locate the redundant vertices, the included angle of the two line segments that share each vertex is computed. Any vertex whose included angle is greater than a user defined value (typically around 179°) is removed. It should be noted that this process also eliminates excessive vertices in arcs or other curve segments. It is also possible at this stage to locate any arcs or circles in the contour representation and replace the segmented representation with appropriate second order formulations. As shown in Figure 2(b), dramatic improvements in part quality may be obtained through proper contour refinement.

Finally, any desired beam offset calculations are applied to the contour. It should be noted that for LENS™, the beam offset serves several purposes. First, beam offset may be utilized in its traditional fashion, correcting for the fact that the weld pool created by the laser has a finite width by providing an

(a) (b)

Figure 3. (a) With no beam offset applied, the weld beads drawn for the borders at the tip of the channel overlap, resulting in an uneven surface. (b) Applying beam offset eliminates the overlap, resulting in a flatter top face.

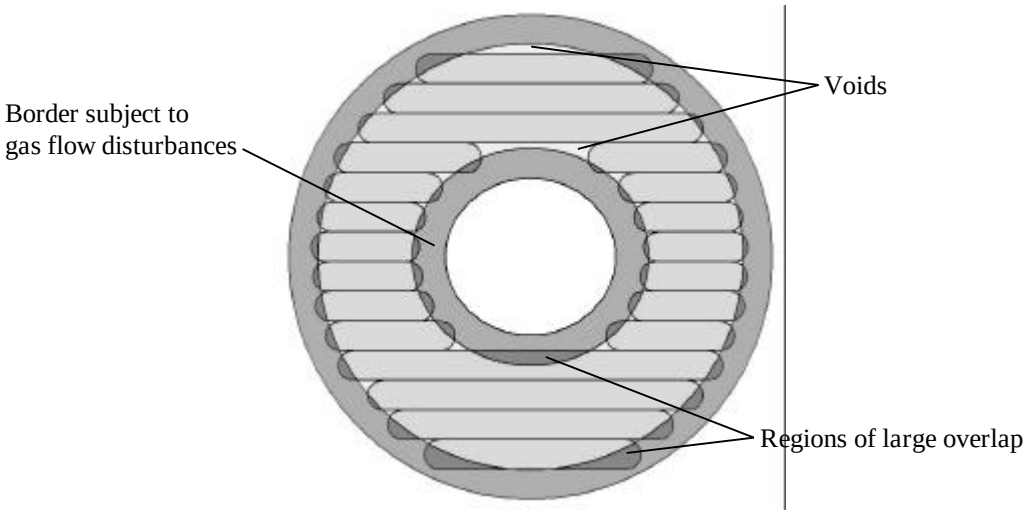

Figure 4. For even basic geometry, many problems may be encountered during a fill pass. Since the width of the weld pool will not always produce weld bead edges aligned with the border geometry, regions of large overlap, and regions with voids may be formed. Further, gas currents blowing back from the part may affect the powder stream, especially in tight areas. If the same fill pattern is repeated, the small disturbances produced by these flaws will build upon themselves, resulting in a poor final product.

offset compensation to account for this width. This compensation not only provides for improved dimensional accuracy in the *xy*-plane, but also assists in creating flat, even layers by preventing weld beads from overlapping each other (Figure 3). Since LENS™ is focusing on creating near-net shapes, rather than net shapes, beam offset may also be used to control the amount of excessive material left on a part, providing for the proper amount of stock required for the final finishing process.

Fill pattern

For solid parts, an appropriate technique must be utilized to create the necessary fill pattern. The choices for this fill technique may be broken down into one of two primary methods: rasters and "conformal" contours. Regardless of method, the fill technique must meet one primary requirement. Since the metal for material buildup is injected into the LENS™ part as a powder stream, effects of the localized geometry on the powder stream must be controlled. Further, it must be recognized that the weld beads have finite width; widths that may not always "fit" evenly into a layer's border geometry, causing both regions of excessive overlap and possible voids (Figure 4). While neither overlaps nor voids are in and of

(a) (b) (c)

Figure 5. (a) Created using conformal contours. (b) Created using a 0°, 90° raster hatch pattern. (c) Created using a 0°, 105°, 220°, … hatch pattern.

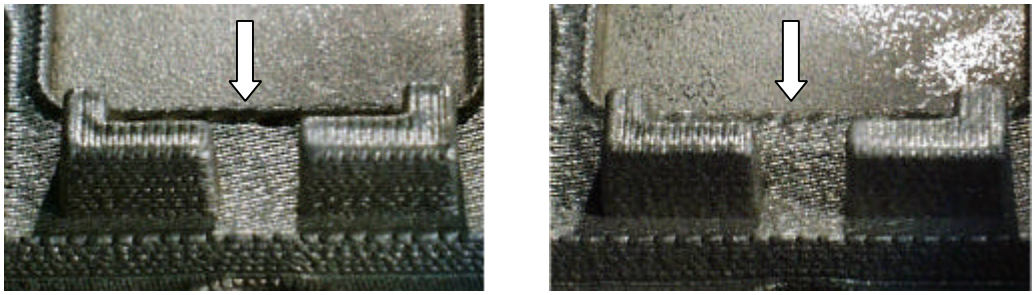

(a) (b)

Figure 6. (a) Shallow angles of attack between border vectors and the fill rasters produce buildup along borders. (b) Eliminating these shallow attack angles produces improved characteristics.

themselves detrimental to the build process (overlaps will produce a slight increase in thickness, while voids will result in a slight decrease), the errors caused by these localized flaws can, if compounded across enough layers, will result in a poor part. Attacking the geometry from different directions during the fill process can alleviate the localized affects. To accomplish the different angles of attack, the fill pattern must be designed such that a "randomness" is introduced into the build process.

Conformal contours, which follow the outline of the part in decreasing size, were studied as one possible fill technique. However, basic experiments with conformal contours revealed that even for simple cylindrical parts, the required randomness is not introduced, resulting in extremely poor builds (Figure 5(a)).

The use of raster fills has proven an effective method of introducing the necessary variations between the fill vectors on each layer. However, even here, care must be exercised when determining the raster angles on a per layer basis. Early work on LENS™ utilized rasters that were always oriented at either 0° or 90°. While a vast improvement over the use of conformal contours, these static angles were still the source of localized build errors, due to the repetition of the fill angles. As a result, regions aligned with the *x* and *y*-axes would often experience unevenness in the build (Figure 5(b)).

The first attempt at introducing more variation into the hatch angles was to use randomly generated values for the hatch orientations. However, this allowed for angles that are just a few degrees off of the "standard" angles of 0°, 30°, 45°, 60°, and 90°. When filling near these standard angles with a shallow angle of attack (e.g. filling along a 30° border with a 31° hatch angle), the width of the weld bead repeatedly overlaps the border, producing a significant buildup, again resulting in an uneven build, as demonstrated in Figure 6. Furthermore, retracting the hatch to prevent the overlap was undesirable due to the likelihood of forming voids in the part.

After several iterations, the angle pattern converged on using a value of 105° between successive layers. This value provided several key benefits. First, the fill angles across two layers are nearly orthogonal, allowing for a large differentiation of attack angle to minimize the localized geometry effects. Also, at 105°, it takes 12 layers before any raster angle is repeated in a part, which further introduces pseudo-randomness into the process. Finally, 105° causes the standard angles to be either hit exactly, or at an angle greater than or equal to 15°, preventing the shallow angle of attack problems previously discussed. As shown in Figure 5(c), the results obtained through the 105° hatch algorithm are significantly improved over both 0°, 90° hatching and conformal contours.

Future work

Even though the current three-axis LENS™ system is "officially" a two-1/2D process, the weld pool characteristics, combined with the high weld pool freezing rates do allow for the creation of slight overhung surfaces. To date, parts with overhangs up to 15° (for 0.015" thick layers) have been created. However, the creations of overhangs is still not fully understood in terms of the best speeds and feeds required to consistently create even, non-distorted layers. Future work will study what software alterations can be used to aid in the process of creating overhung surfaces.

Another near-term task being studied is what software controls will be required for creating complex, multi-material geometries. While previous work has looked at creating layered objects (where the material choice for each layer is user defined on a layer-by-layer basis), future work will look at the software controls needed to identify and control material composition throughout any given layer. Recent experiments with using implicit blending functions, combined with surface-distance functions, have proved promising [7].

Conclusions

Recent experience in LENS™ has demonstrated the strong reliance that the metal deposition process has to parameters such as border representations and fill patterns. This research was aimed at understanding and developing optimized software solutions for the generation of LENS™ parts. Specifically, this work studied the affects of the border representation schemes, identified difficulties associated with over-defined representations, and developed methods of refining the contour data to improve the build process. Further, this research was directed at identifying an "ideal" fill pattern for creating solid parts. The final result of the fill pattern studies produced pseudo-random raster fill technique which introduces the necessary randomness into the build process to minimize localized geometry affects, while preventing problems with shallow angles of attack along standard design surfaces.

Acknowledgements

This work is supported by the U.S. Department of Energy under contract DE-AC04-94AL850000. Sandia is a multiprogram laboratory operated by Sandia Corporation, a Lockheed Martin Company, for the United States Department of Energy.

References

[1] M.L. Griffith, D.M. Keicher, C.L.Atwood, J.A. Romero, J.E. Smugeresky, L.D. Harwell, D.L. Greene, *Free Form Fabrication of Metallic Components using Laser Engineered Net Shaping (LENSä)*, Proceedings of the Solid Freeform Fabrication Symposium, August 12-14, 1996, Austin, TX, p. 125.

[2] J.R. Fessler, R. Merz, A.H. Nickel, F.B. Prinz, L.E. Weiss, *Laser Deposition of Metals for Shape Deposition Manufacturing*, Proceedings of the Solid Freeform Fabrication Symposium, August 12-14, 1996, Austin, TX, p. 117.

[3] F.Klocke, H. Wirtz, W. Meiners, *Direct Manufacturing of Metal Prototypes and Prototype Tools*, Proceedings of the Solid Freeform Fabrication Symposium, August 12-14, 1996, Austin, TX, p. 141.

[4] J. Mazumder, K. Nagarathnam, J.Choi, J. Koch, D. Hetzner, *The Direct Metal Deposition of H13 Tool Steel for 3-D Components*, Journal of Materials, Vol. 49, Number 5, May 1997, p. 55.

[5] D.M. Keicher, J.L. Jellison, L.P. Schanwald, J.A. Romero, D.H. Abbott, *Towards a Reliable Laser Powder Deposition System through Process Characterization*, 27th International SAMPE Technical Conference, Vol. 27, Diversity into the Next Century, proceedings of SAMPE '95, Albuquerque, NM, Oct. 12-14, 1995, p. 1029.

[6] M. L. Griffith, C.L. Atwood, J.E. Smugeresky, L.D. Harwell, D.L. Greene, E. Schlienger, *Using Laser Engineered Net Shaping (LENSä) to Fabricate Metal Components*, proceedings of the Rapid Prototyping and Manufacturing Conference, April 22-24, 1997, Dearborn, MI.

[7] C.T. Lim, M.T. Ensz, M.A. Ganter, D.W. Storti, *Object Reconstruction from Layered Data using Implicit Solid Modeling*, Journal of Manufacturing Systems, Vol. 16, Number 4, 1997, p. 260.